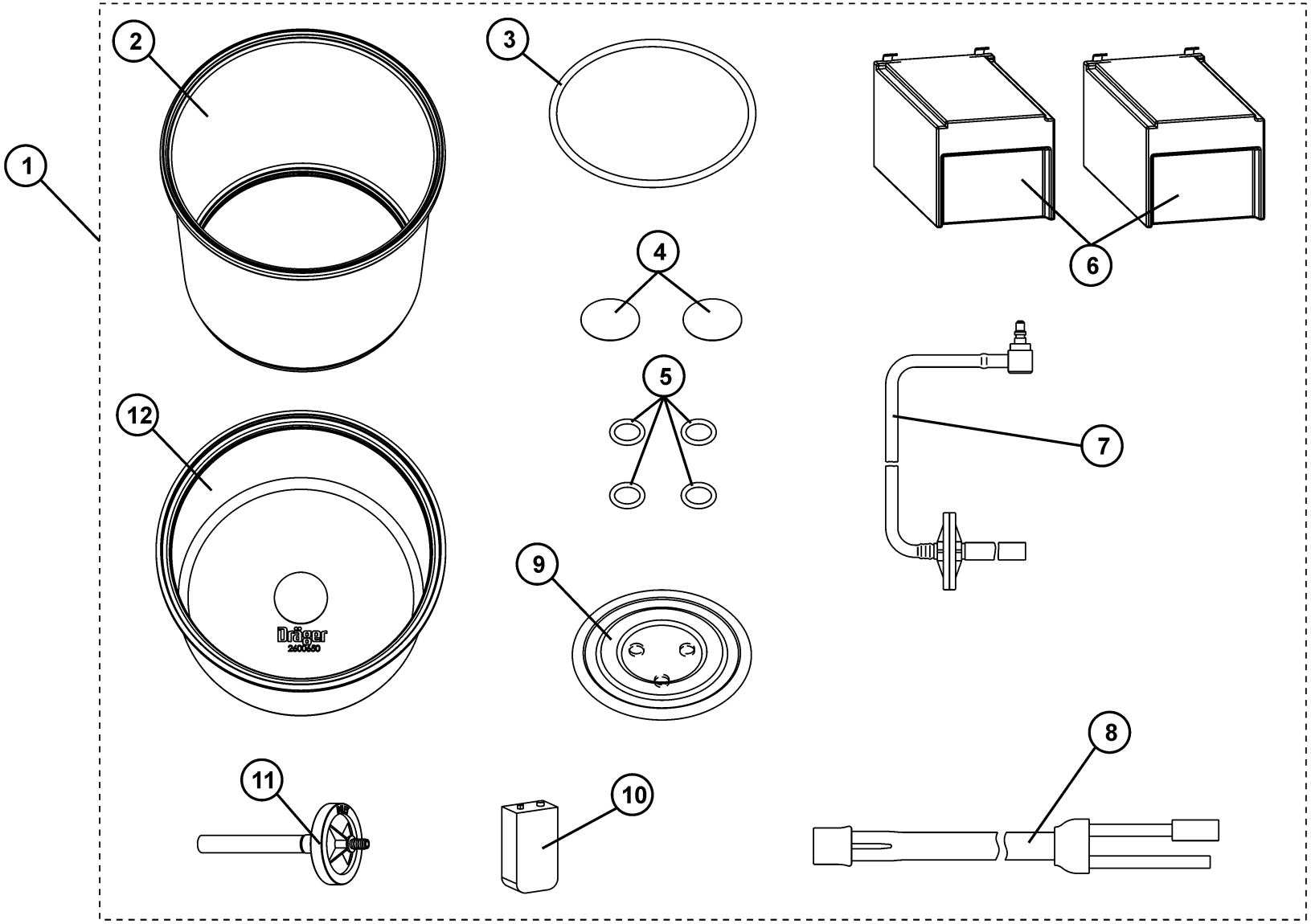
1
2
3
4
5
6
7
8
9
10
11
12
Dräger
2400560

Fabius/Cosy, 3-yearly

CD-ID: 2009-10-INT

Pos	Part No	Description	Unit	Remark	Price	Status	Page	Returnable	diagnose	End ofService	Order No
1	MX08197	Fabius/Cosy Set 3y	St	Set kompl.	574,61			Yes		00000000	MX08197
2	2600650	Diaphragm, cup	St		86,08					29991231	2600650
3	8604831	O-RING 105 x 4	St		4,38					29991231	8604831
4	M23225	VALVE DISK	St		12,79					29991231	M23225
5	U04314	O-RING SEAL	St		0,97					29991231	U04314
6	1841416	Lead-acid battery 12V/3.5AH	St		61,87					29991231	1841416
7	8302841	PRESSURE GAUGE LINE	St		54,60					20161231	8302841
8	8410929	Measuring Tube for Flowsensor	St		51,50					00000000	8410929
9	M16497	DIAPHRAGM	St	for alarm valve	16,78					29991231	M16497
10	8301856	NiCad-Battery 9V 100mAh	St	optional	16,67					00000000	8301856
11	8402868	BACTERIA FILTER	St		28,60					29991231	8402868
12	2600651	Diaphragm, Pisten	St		105,90			Yes		00000000	2600651