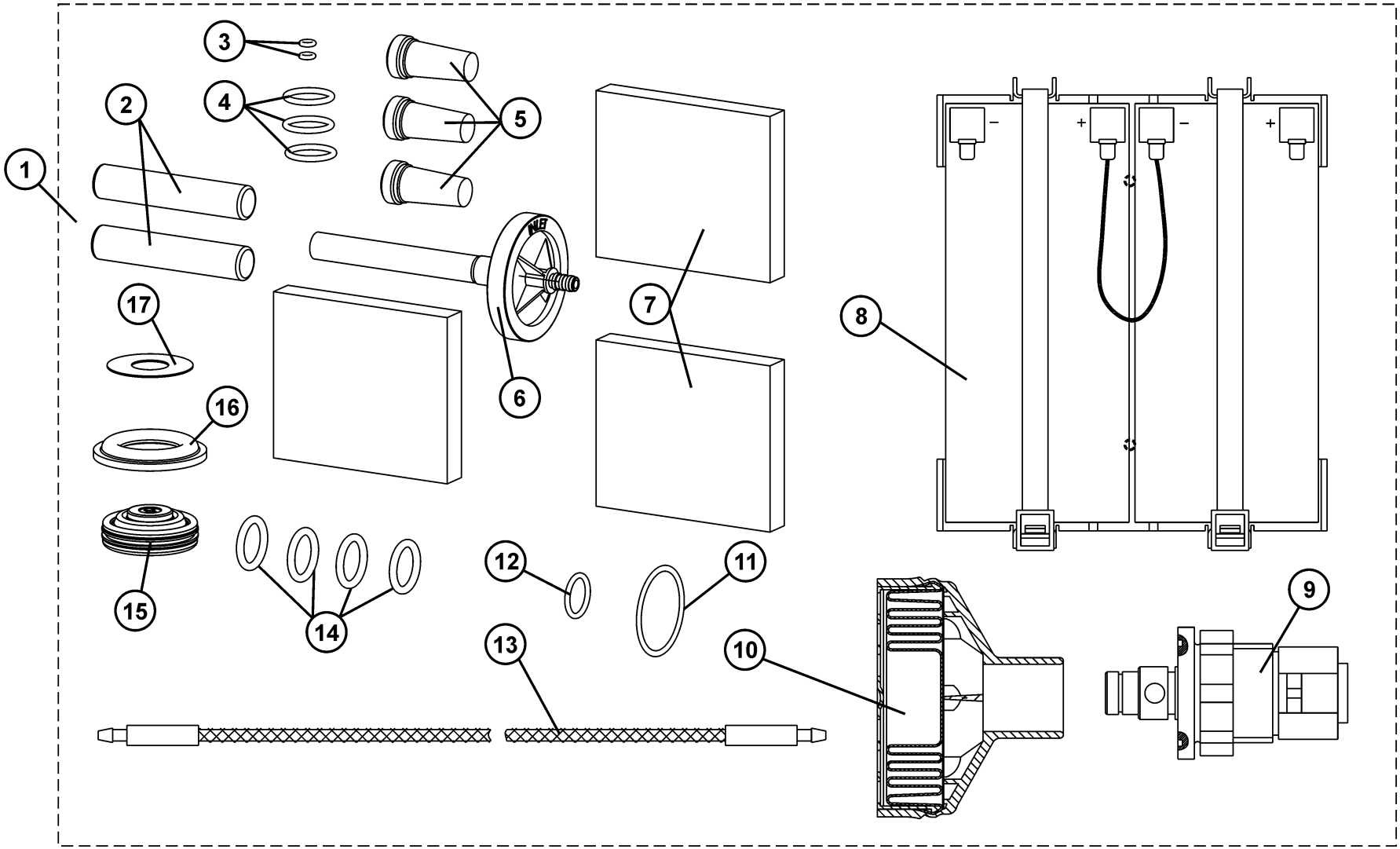
1
2
3
4
5
6
7
8
9
10
11
12
13
14
15
16
17
–
+
–
+

Pos	Part No	Description	Unit	Remark	Price	Status	Page	Returnable	diagnose	End ofService	Order No
1	MX08195	Julian Set 6y	St	Set kompl.	703,00			Yes		00000000	MX08195
2	1835343	LITHIUM STOR.BATTERY 3V/1400	St		30,61					29991231	1835343
3	R52382	O-RING SEAL	St		1,07					29991231	R52382
4	R31296	O-RING SEAL	St		1,71					20101231	R31296
5	M19238	MESH BOTTOM	St		16,25					29991231	M19238
6	8402868	BACTERIA FILTER	St		28,60					29991231	8402868
7	8601169	FILTER MAT	St		1,93					20101231	8601169
8	8601764	ASSY.BATTERY JULIAN	St		155,19			Yes		00000000	8601764
9	8409199	PRESSURE REGULATOR	St		162,53			Yes		20101231	8409199
10	CH00102	BACTERIA FILTERS	St		22,30					00000000	CH00102
10	6723976	SET OF 5 BACTERIA FILT.(CH102)	St		100,00					00000000	6723976
11	D19080	O-RING SEAL	St		1,27					20101231	D19080
12	M23154	O-RING SEAL	St		5,56					29991231	M23154
13	8601238	NAFION HOSE 150 LG.	St		50,54					29991231	8601238
14	U04314	O-RING SEAL	St		0,97					29991231	U04314
15	M33765	DIAPHRAGM	St		74,87					20101231	M33765
16	M33275	DIAPHRAGM	St		21,07					29991231	M33275
17	8407979	SEALING WASHER	St		2,89					29991231	8407979